On the Design of Low-Cost 60-GHz Radios for Multigigabit-per-Second Transmission over Short Distances

Peter Smulders, Haibing Yang, and Iwan Akkermans, Eindhoven University of Technology

ABSTRACT

This article reviews, discusses, and proposes crucial 60-GHz radio design options. First, it discusses the choice of integrated circuit technology for the radio frequency (RF) part and presents the status quo concerning standardization. Then, it describes the 60-GHz channel-propagation characteristics and proposes antenna solutions, as well as the architecture of the RF part, including a channelization scheme and frequency synthesizer architecture. With regard to the baseband part, we discuss the use of multicarrier modulation and compare it to single-carrier modulation. Finally, we demonstrate the consequences of the various design options as judged from link-budget calculations.

INTRODUCTION

Many multimedia applications call for wireless transmission at gigabit per second (Gb/s) or multi-Gb/s transmission over short distances (< 10 m). Examples are wireless gigabit Ethernet (1.25 Gb/s), wireless high-speed download (as fast as possible), and wireless transfer of high-definition video (2–20 Gb/s). These data rate figures cannot be accommodated in the traditional frequency bands below, let us say, 10 GHz without significant service degradation. However, sufficient spectral space is available around 60 GHz, where a frequency band in the order of 7 GHz has been allocated worldwide for unlicensed use [1]. The reason for this allocation is the occurrence of significant oxygen attenuation in this band that makes it unsuitable for long-range (> 1 km) transmission. Not only the regulation of the 60-GHz band has significance for the development of the 60-GHz radio technology, but also the regulation of alternative broadband radio technologies, such as ultra wideband (UWB). In Europe, the use of UWB will be restricted considerably starting in 2010 [2], which increases the significance of 60-GHz radio.

In March 2005, the IEEE 802.15.3 Task Group 3c was formed to develop a 60-GHz-based physical layer as an alternative to the existing 802.15.3 wireless personal area network (WPAN) Standard 802.15.3-2003. This promises a high coexistence with all other microwave systems in the 802.15 family. The standard should be ready by September 2008. In addition, there are some ad-hoc initiatives to develop a de-facto standard for more specific products. An example is the Wireless HD consortium that is developing specifications for the wireless high-definition multimedia interface (HDMI). Target data rates for first generation products are 2–5 Gb/s, whereas scalability to 20 Gb/s is theoretically possible for higher resolutions and color depths.

Traditionally 60-GHz radio frequency (RF) technology has been the domain of expensive chip technologies based on III-V compound materials such as gallium arsenide and indium phosphide. These technologies were mainly intended for military applications for which the cost is not very relevant. A relatively new development is the achievement of considerable RF performance with low-cost process technologies based on silicon. With silicon germanium (SiGe) technology, the maximum frequency of operation (f_{max}) amounts to hundreds of GHz, and it has the best physical properties for providing sufficient RF performance [3, 4]. The RF performance of a baseline complementary metal–oxide semiconductor (CMOS) is worse but increases more rapidly due to the enormous world-wide effort to scale to lower gate-lengths, which implies a higher f_{max}. The speed of analog CMOS circuits increases by roughly one order of magnitude every ten years. Power amplifiers (PAs) implemented in today's 90 nm RF-CMOS technology can produce an output power level of about 6 dBm with sufficient linearity, whereas low noise amplifiers (LNAs) with a noise figure of 4.5 dB are realistic [5]. The CMOS chip industry already invests massively in 65 nm technology, with 35 nm as the next step, promising increasing performance in the future. This makes CMOS the lowest cost option and with its rapid performance improvement due to continuous scaling, CMOS is becoming the future technology of choice to address the low-cost millimeter-wave market. This article discusses crucial 60-GHz radio design options, taking into account the technical constrains imposed by the use of silicon-based 60-GHz RF technology.

Propagation Channel

A basic link-budget calculation as given in [6] leads to the conclusion that for the reliable transmission of Gb/s, over distances up to 10 meters, antennas must have a relatively high gain. Such antennas do not provide rich multipath, which rules out true multiple-input and multiple-output (MIMO) techniques at 60 GHz. However, antenna gain is easy to achieve with small structures at that high frequency, which motivates the use of narrow antenna beams in combination with beam steering techniques to increase the flexibility of operation. Therefore, in what follows, we will focus on the application of high-gain antennas.

Small Scale Fading

Figure 1 shows the typical variation in received power at 60 GHz over distances that are small or comparable with the free-space wavelength (5 mm). Directive antennas have been used that have a total gain of 23 dBi at both ends of a line-of-sight (LOS) link. The measurement environment is described in [7]. The bandwidth of the signal is 2 GHz. It is observed that with such a large bandwidth, the available signal power arriving at the receiving end (RX) varies insignificantly if the position is changed over a limited range, that is, within the small-scale region. This favorable characteristic implies that, as opposed to narrowband fading, only a very small fading margin is required in the 60-GHz radio design and that the available signal power at a certain position depends only on the large-scale properties of the environment. For the non-LOS case, similar variations are observed at about a five dB lower signal strength.

Large Scale Fading

The received power from a transmitter at a separation distance d is related to the path loss and can be represented as

$$P_r(d) = P_t + G_t + G_r - PL(d) \quad (1)$$

in decibels, in which P_t is the transmit power, whereas G_t and G_r are the antenna gains at transmitter and receiver side, respectively. The path loss is usually modeled over the log-distance as

$$PL(d) = PL_0 + 10n\log(d) + X_\Omega \text{ (dB)}, \quad (2)$$

where PL_0 gives the reference path loss at $d = 1$ m, n is the loss exponent, and X_Ω denotes zero mean Gaussian distributed random variable with a standard deviation Ω. Wideband (1 GHz) measurements under LOS conditions with directive antennas revealed n-values close to 2, which complies with the well-known Friis formula for free-space [6, 7]. The measured standard deviation Ω is about 1 dB, which confirms the low small-scale variability in received power.

With directive antennas, the channel dispersion can be kept amazingly low, in the order of a few nanoseconds at maximum, even if there is considerable mispointing [7]. This implies that with high-gain antennas and LOS conditions, very high data rates in the order of Gb/s can be obtained by applying just a simple modulation scheme and without the need for complex channel equalization. This is confirmed by practical experiments performed at the Eindhoven University of Technology.

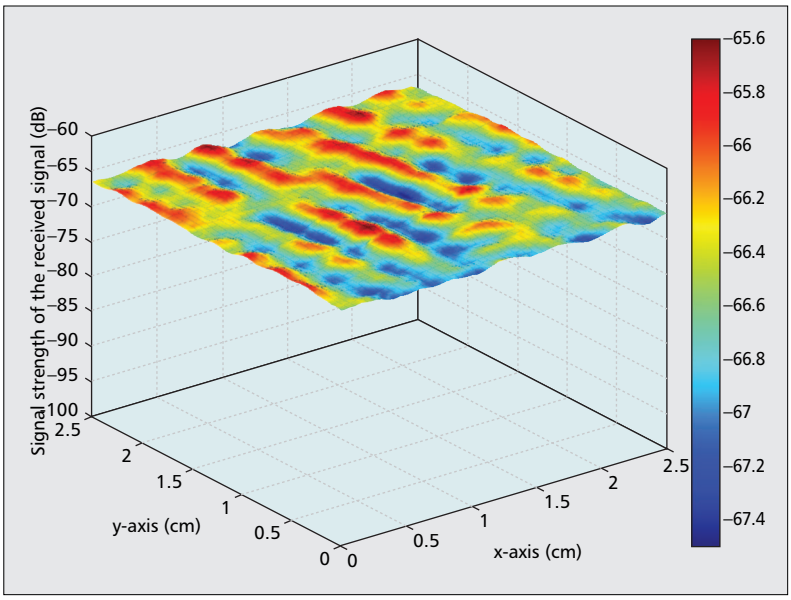

Figure 1. *Small-scale variability of the signal strength at 60 GHz.*

Antennas

To obtain sufficient link budget for Gb/s transmission over 10 meters distance, an antenna array is required that has sufficient gain and supports beam-forming. Moreover, it should feature the following properties:

- Low fabrication cost, readily amenable to mass production
- Light weight, low volume
- Easy to integrate with monolithic microwave integrated circuits (MMIC) RF front-end circuitry
- High efficiency
- Sufficient bandwidth
- Sufficient antenna directivity

Antenna designs have been described in the literature that meet many of these requirements, but careful consideration reveals that most designs are not readily amenable to mass production. This is an essential prerequisite to achieve truly low fabrication cost. The fabrication process should be fully compatible with current substrate processing technology unless there is a very strong reason to deviate from this requirement. The antennas should have a balanced feed to make them easy to integrate with the PAs and LNAs, which are typically differential amplifiers when integrated in silicon-based technology. In addition, the antenna efficiency should be high. To achieve a high efficiency, the antenna feed should be low loss. 60-GHz transmission lines can easily be made low loss (e.g., 0.02 dB loss per mm), but the design challenge is to connect the transmission line to the flip-chipped circuitry without resulting in considerable reflection losses.

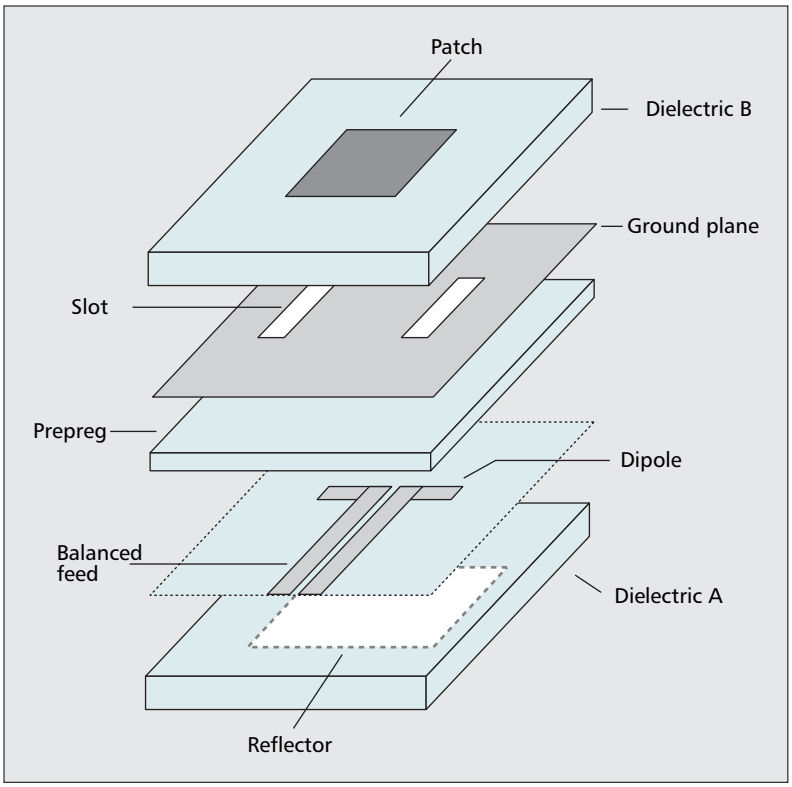

Figure 2. *Proposed geometry of a single element.*

Single Element Antenna

With the previous requirements in mind, the use of microstrip patch antennas is an obvious option. These are inherently low cost, light weight, and low volume. Their design is essentially a joint optimization of bandwidth and power efficiency. From an interconnection point of view, it would be profitable to integrate a patch antenna together with the active RF devices on a single silicon chip. Unfortunately, silicon is much less suited for antenna bandwidth and efficient radiation than for circuit performance, due to the high value of the dielectric constant ($\varepsilon_r = 11.9$). Another disadvantage is that semiconductor technology cannot be stacked, which considerably frustrates antenna design and optimization. Therefore, this option is ruled out and as an alternative, the antenna is realized in printed circuit board (PCB) technology, which can have a much lower dielectric constant ($\varepsilon_r = 2.2$) and can be stacked. We propose a balanced-fed aperture-coupled patch antenna that combines a good performance in both bandwidth and radiation efficiency [8]. The geometry of this solution is shown in Fig. 2.

A problem associated with microstrip antennas is the excitation of surface waves in the dielectric. These surface waves reduce the efficiency of the antenna and deteriorate the radiation pattern. In our design, the surface-wave excitation is minimized through the use of two distant coupling apertures that cancel part of the surface-wave power. An additional problem is that power radiates to the backside of the antenna. To minimize this, a reflector element is introduced. In this way, the efficiency can be increased from about 0.6 to about 0.9. To obtain sufficient bandwidth, the patch and both slots have been made resonant at slightly different frequencies. An increase in bandwidth is observed from about 3 percent for the conventional patch to more than 10 percent for the herewith proposed design. The relative dielectric constant of the various layers should be as low as possible. A low dielectric constant yields a high bandwidth and limits the amount of surface-wave power. For this reason, Teflon-based materials have been chosen, which have a relative dielectric constant of about 2.2.

Circular Array Antenna

Antenna directivity can be achieved by configuring an array of antenna elements. We propose a circular array of six elements as described previously, which enables the scan of the beam within a hemisphere. In this configuration, antenna elements are positioned such that the effect of mutual coupling between the elements is minimized. This results in a good scan performance, that is, a radiation efficiency better than 0.8 and a pattern directivity better than 12 dBi within a scan angle of 45° [8].

RF Architecture

The proposed basic architecture of the RF transceiver part is shown in Fig. 3a. This architecture inherently implies the following design choices:

Direct Conversion instead of Heterodyning: The main reason to apply direct conversion, also referred to as homodyne conversion or zero-IF, is that no critical image rejection filtering is required because there is no image frequency. The absence of IF filters makes it very suitable for multi-band, multi-standard operation. In a direct conversion architecture, DC offset voltages occur due to "local oscillation (LO) leakage," which can corrupt the signal [9]. In wideband systems, however, DC offset can be canceled by employing AC coupling in combination with a *DC-free* modulation scheme.

One PA and one LNA per Antenna Element: In particular at frequencies as high as 60 GHz, it is difficult to make sufficient transmit power with silicon-based devices. This problem is solved by putting a number of PAs in parallel. Losses due to power combining are avoided by using one PA per antenna element so that the power combining happens automatically *in the air*. In this way, n parallel PAs, of equal output power, produce $10\log n$ dB, as much transmit power as compared to one individual PA. Similarly, one LNA per antenna element is employed at the receiving end. In this way, n parallel LNAs effectively have a $10\log n$ dB lower noise figure when compared with one such LNA alone.

Phase Shifters instead of True Delay Lines: In each branch, controllable phase shifters are employed to enable beam steering. From a performance perspective, it would be better to apply true time delay lines that give a constant phase over the whole transmission bandwidth. However, the required delay lines would require more costly chip area, whereas phase shifters do not. It has been observed that the phase variation over the full 7 GHz of allocated bandwidth as a

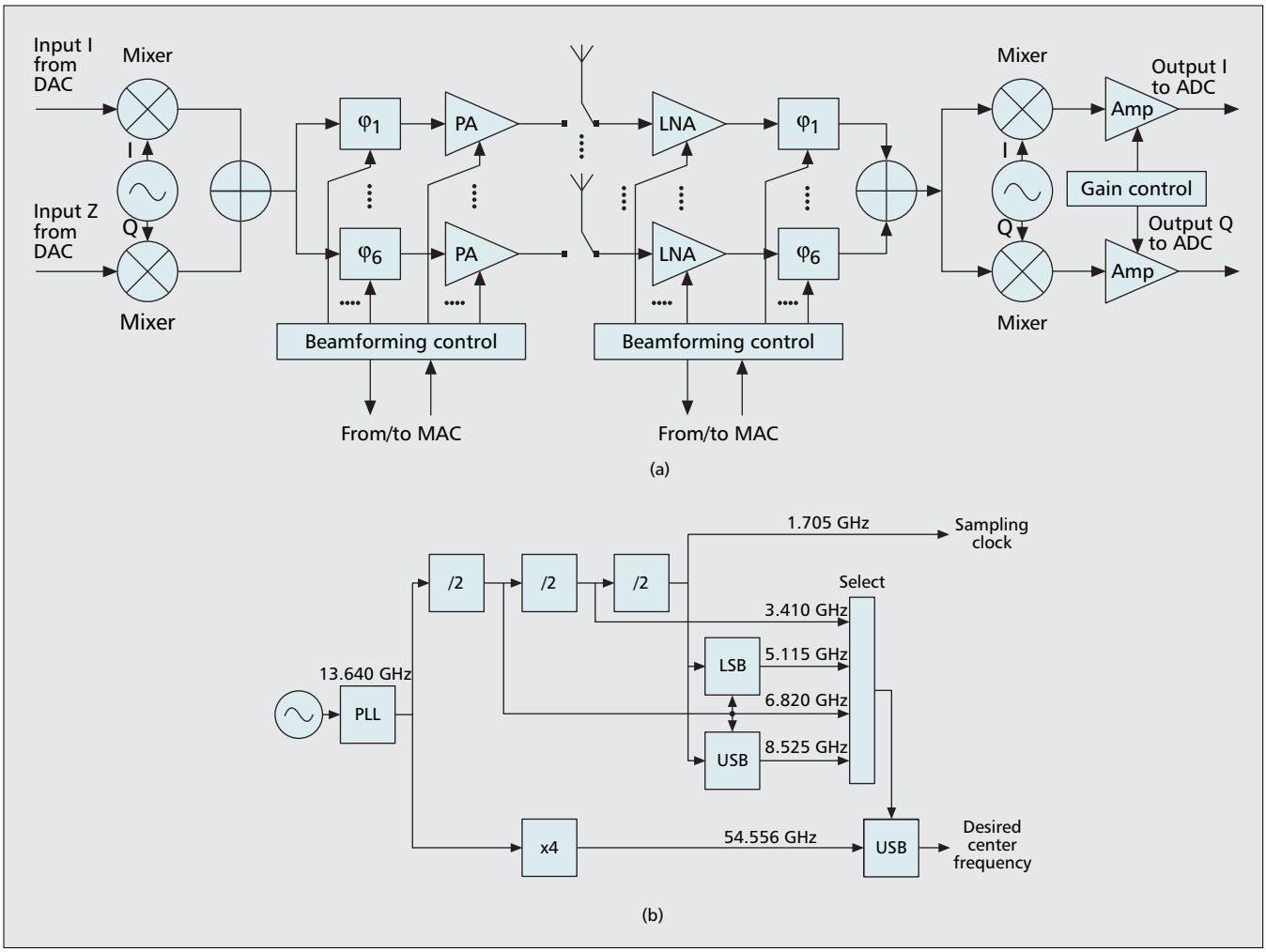

■ **Figure 3.** *Architecture of a) RF transceiver part; b) frequency synthesizer for a 60 GHz four-channel system.*

consequence of implementing phase shifters causes only an insignificant blurring of the antenna pattern. For the purpose of beamforming, a resolution of three bits (i.e., 45°) is sufficient for each of the individual phase shifters.

Variable Gain Amplifiers: In the RF-sections, variable PAs and LNAs are applied to adapt the antenna pattern better to the angular profile of the received radio waves. In particular, this is effective in non-LOS situations, where dominant power contributions come from various directions. However, the beam patterns remain too broad to reduce interfering sources effectively.

Integration of Front-end Electronics with Antenna Array: Because antenna feed structures easily can be made low-loss, there is no need to put a dedicated RF front-end section close to each antenna element. Instead, all the front-end electronics can be integrated on one single chip, which minimizes the total chip area consumption, as well as differentiation in antenna branch properties. Conventional wire bonding is not suitable for interconnection of the front-end chip to the antenna feed structure because the wire bonding is highly inductive at higher frequencies, and variations in wire length and loop shapes cause unacceptable performance variations. Alternatively, flip-chip assembly technologies provide an excellent electrical connection at high frequencies due to the short interconnect between the die bond pads and the transmission lines on the substrate. The bump of a flip-chip transition is inherently broadband due to its very small parasitic. Additional advantages of flip-chip assembly are compact size and low-cost in large volumes. The interconnect loss due to packaging of the chip-antenna combination can be limited to 2 dB with application of conventional low-cost packaging technology [3].

Channelization and Synthesizer Architecture

According to the technical requirements of IEEE Task Group 3c, at least one mandatory mode with a net bit rate of 2 Gb/s or more is required. If we accommodate four channels in the available frequency band that ranges from 57.05 to 64 GHz, that is, the 60-GHz band as allocated in the United States and Canada, the required spectral efficiency would be 2 Gb/s/(6.95/4) GHz = 1.151 b/s/Hz, whereas the accommodation of three channels would relax the spectral efficiency requirement to 0.863 b/s/Hz. There are important reasons to choose in favor of a four-channel system; the problem of co-channel interference in a multi-user environment is alleviated, and it becomes easier to route

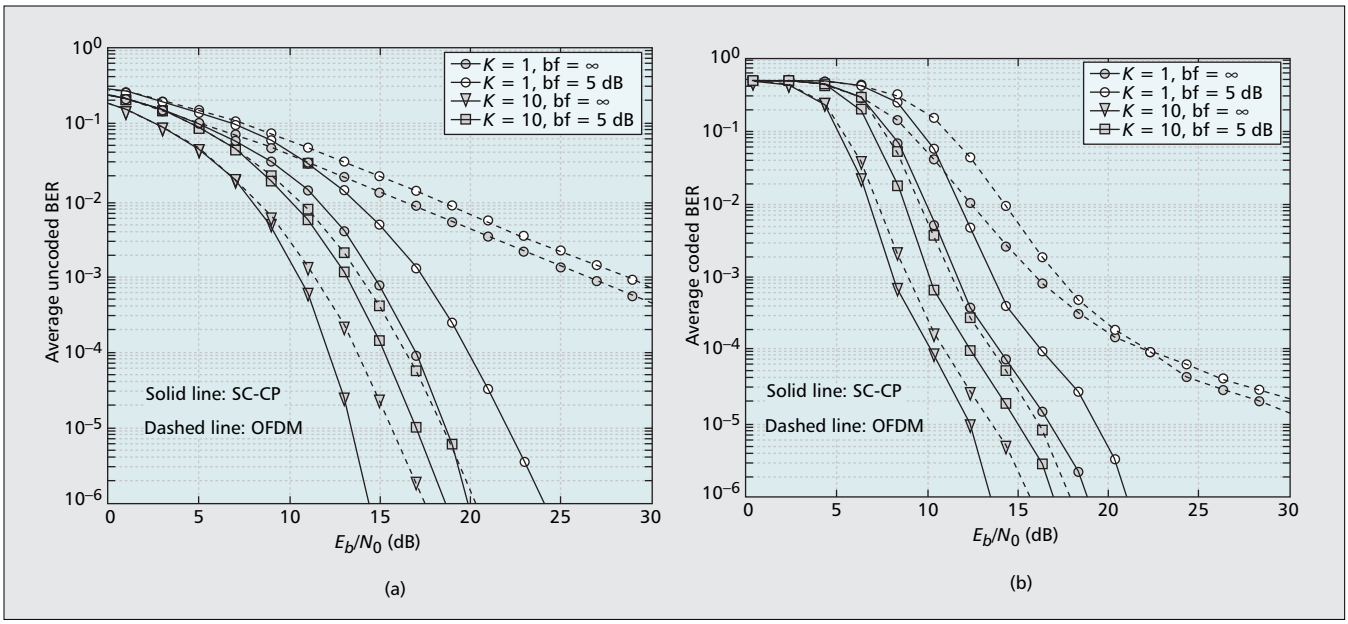

Figure 4. *Perfomance of a) uncoded BER; b) coded BER.*

the 60-GHz channels via different transceivers to improve coverage. The particular center frequencies for a 60-GHz four-channel system can be chosen in such a way that it greatly simplifies the design of the synthesizer. Figure 3b shows a synthesizer architecture in which all of the center frequencies are generated from a single phase locked loop (PLL), yielding center frequencies at 57.970, 59.675, 61.380, and 63.085 GHz, which implies a channel spacing of 1.705 GHz. This synthesizer exploits the relationship between the center frequencies for the four-channel system and oscillator. Since all of the center frequencies are available at all times, the time for switching between the different subbands can be very short. The image frequencies are at least 7 GHz away from the channel and can be filtered out easily by an integrated narrowband amplifier. Furthermore, note that the nearest spur due to third-harmonic distortion is found at 54.556 + 3 * 3.410 = 64.786 GHz, which is well outside the operating frequency band. In principle, the spurs due to non-ideal isolation of the selector could generate a DC offset after direct downconversion. However, the demands on the isolation of the selector are not very stringent for the proposed RF architecture in which AC coupling in combination with a DC-free modulation scheme is applied.

OFDM

A significant system design consideration is the choice of the modulation scheme and values of the associated parameters, because this determines important figures of merit, such as spectral efficiency, power efficiency, required level of transmit power, required coding overhead, and system complexity. An obvious option is the use of orthogonal frequency division multiplex (OFDM) as used in the majority of broadband wireless systems because of its many inherent advantages, such as its high spectral efficiency and high robustness against multipath. An important parameter when designing an OFDM system is the size N of the fast Fourier transform (FFT) block. This block, which takes about 20 percent of the RX digital baseband complexity, must be as small as possible. Table 1 shows the trade-off of three obvious options for the four-channel system that supports 2 Gb/s net data rate over one such channel, with the determined channel spacing of 1.705 GHz. In all options, all subcarriers are modulated using quadrature phase-shift keying (QPSK). By limiting the constellation size to QPSK, the precision of the digital logic, including the analog-to-digital converters (ADCs) and digital-to-analog converters (DACs) can be reduced, and the requirement with respect to the phase noise of the local oscillator can be relaxed. So, this helps to reduce the overall complexity of the system. In addition, the required transmit power is minimized for a certain bit error rate (BER). For option 1, the FFT size N equals 512, whereas the guard time T_g amounts to one-fourth of the FFT integration time T_u. The problem with this option is that the required number of data subcarriers is 501 so that there are 11 subcarriers left for pilot transmission, which is an insufficient number for adequate channel estimation and correction. This problem can be solved by improving the efficiency by decreasing the guard time to $T_u/8$, which yields the figures of option 2. However, with this option, another problem arises: the guard time becomes too short. The guard time should be at least two to four times the maximum encountered root-mean-squared (rms) delay spread to reduce interblock interference to an acceptable level. With the use of directional antennas under non-LOS conditions, rms delay spread values can reach values of 20 ns. The only way to achieve a sufficiently large guard time, as well as a sufficient number of subcarriers is to increase the FFT size to 1024, which is represented by option 3. The guard time then becomes 75 ns, which implies a good robustness against channel dispersion, whereas one pilot can be accommo-

	Option 1	Option 2	Option 3
Number of channels	4	4	4
Channel spacing B_T	1.705 GHz	1.705 GHz	1.705 GHz
FFT size N	512	512	1024
Subcarrier spacing $\Delta f = B_T/N$	3.330 MHz	3.330 MHz	1.665 MHz
FFT integration time $T_u = 1/\Delta f$	300.3 ns	300.3 ns	600.6 ns
Guard time $T_g = T_u/4$ or $T_u/8$	$T_u/4$ = 75.075 ns	$T_u/8$ = 37.537 ns	$T_u/8$ = 75.075 ns
OFDM symbol time $T_s = T_g + T_u$	375.375 ns	337.837 ns	675.675 ns
Modulation format	QPSK	QPSK	QPSK
Gross subc.data rate $R_{b,gross} = 2/T_s$	5.328 Mb/s	5.920 Mb/s	2.960 Mb/s
Coding rate r_c	3/4	3/4	3/4
Net subc.data rate $R_{b,net} = r_b . R_{b,gross}$	3.996 Mb/s	4.440 Mb/s	2.220 Mb/s
Required number of data carriers	501	451	901
Required number of pilot carriers	42	38	76

■ Table 1. *Options for coded OFDM.*

Single carrier modulation with inclusion of a cyclic prefix is often proposed as a more front-end friendly alternative block-transmission technique for OFDM mainly because of the much lower PAPR of the SC signal.

dated per 12 subcarriers, leaving 47 subcarriers available for different purposes.

Impact of RF Impairments

An often mentioned drawback of OFDM is its sensitivity for RF impairments. In particular, phase noise, I/Q imbalance, and amplifier nonlinearity would have a negative impact on its BER performance. With the constellation-size reduced to QPSK, in combination with the subcarrier spacing as large as 1.7 MHz, the phase-noise problem, as well as the I/Q imbalance becomes insignificant; see, for example, [10] and [11], respectively. What remains is the high peak-to-average power ratio (PAPR) of the OFDM signal. Because of this, OFDM requires a relative expensive and power inefficient transmitter front-end, as well as a high ADC resolution [12, 13].

SC-CP and Comparison with OFDM

Single carrier (SC) modulation with inclusion of a cyclic prefix (SC-CP) is often proposed as a more front-end friendly alternative block-transmission technique for OFDM mainly because of the much lower PAPR of the SC signal, which alleviates the non-linearity problem and reduces the required ADC resolution to well-feasible proportions [12–14].

Figure 4a shows the effect of power amplifier nonlinearity and back off on the uncoded BER performance for both SC-CP and OFDM, both with QPSK modulation. Curves are depicted for a high Ricean K-factor of 10, representing the Ricean LOS channel, as well as for a K-factor of 1, representing the non-LOS case, that is, a channel without a dominating direct path component. The nonlinearity is modeled according to the Rapp high power amplifier (HPA) model with $p = 1$ [15]. With infinite back off, which corresponds to perfect linearity, SC-CP modulation shows a 12 dB advantage over OFDM at a BER of 10^{-3}. This is due to the much better exploitation of frequency diversity of SC when compared with OFDM with parameters of option 3 in Table 1. As a result of nonlinearity with 5 dB amplifier back off, an additional degradation of 2.6 dB occurs for SC-CP. A similar degradation is observed for OFDM. From this we conclude that uncoded SC-CP has a much better capability to exploit the frequency diversity than uncoded OFDM and that this gives a dominant advantage over the power amplifier back-off impact.

Figure 4b shows the BER performance for the case that SC-CP and OFDM are coded with convolutional coding having 3/4 code rate. For the linear case, the advantage of coded SC-CP over coded OFDM amounts to 8 dB. Hence, the added coding improves the capability to exploit the available frequency diversity of both systems but the improvement is 4 dB larger for coded OFDM. For the non-linear case, the additional degradation for coded SC-CP, as well as coded OFDM is still about 2 dB for 5 dB back off. So coding brings SC-CP and OFDM curves closer together, but does not significantly change the impact of nonlinearity.

It can be observed that the diversity exploita-

The frequency-flat channel is already good but does not provide so much diversity, which makes the better diversity-exploiting capability of SC-CP less useful. For the non-linear case, the additional gain for both SC-CP and OFDM is still about 2 dB for 5 dB back off.

	OFDM				SC-CP			
	Uncoded		Coded		Uncoded		Coded	
	LOS	Non–LOS	LOS	Non–LOS	LOS	Non–LOS	LOS	Non–LOS
P_t (dBm)	10	10	10	10	10	10	10	10
IL_t (dB)	2.0	2.0	2.0	2.0	2.0	2.0	2.0	2.0
G_t (dBi)	6.0	6.0	6.0	6.0	6.0	6.0	6.0	6.0
$G_{t,array}$ (dB)	15.6	15.6	15.6	15.6	15.6	15.6	15.6	15.6
PL at 10 m (dB)	88	92	88	92	88	92	88	92
G_r (dBi)	6.0	6.0	6.0	6.0	6.0	6.0	6.0	6.0
IL_r (dB)	2.0	2.0	2.0	2.0	2.0	2.0	2.0	2.0
P_r (dBm)	–54.4	–58.4	–54.4	–58.4	–54.4	–58.4	–54.4	–58.4
T_{eq} °K	290	290	290	290	290	290	290	290
B_T (GHz)	1.7	1.7	1.7	1.7	1.7	1.7	1.7	1.7
F (dB)	8	8	8	8	8	8	8	8
P_n (dBm)	–73.8	–73.8	–73.8	–73.8	–73.8	–73.8	–73.8	–73.8
SNR (dB)	19.2	15.2	19.2	15.2	19.2	15.2	19.2	15.2
$G_{r,array}$ (dB)	7.8	7.8	7.8	7.8	7.8	7.8	7.8	7.8
SNR_{total} (dB)	27	23	27	23	27	23	27	23
$SNR_{required}$ (dB)	13	28	10	17	12	16	9	13
Margin (dB)	14	—	17	16	15	7	18	10

■ Table 2. *Some 60 GHz link budget examples.*

tion advantage of SC-CP is diminished to only 1 dB at a BER of 10^{-3} for the uncoded, as well as for the coded case. This is because the frequency-flat channel is *already good* but does not provide so much diversity, which makes the better diversity-exploiting capability of SC-CP less useful. For the non-linear case, the additional gain for both SC-CP and OFDM is still about 2 dB for 5 dB back off.

Link Budget

Table 2 shows some 60-GHz link budget examples for uncoded as well as for coded OFDM and for uncoded as well as for coded SC-CP, both under LOS, as well as under non-LOS conditions. In all cases, it is assumed that each transmit branch comprises a power amplifier having an output power P_t of 10 dBm, which is feasible with 0.13-µm BiCMOS SiGe technology [3]. This figure is about 6 dB from saturation level and therefore reasonably represents a back off of 5 dB. The interconnect loss between the PA and the transmit antenna element in each transmit branch IL_t, as well as the interconnect loss between the receive antenna element and the LNA in each receive branch IL_r amounts to 2 dB [3]. Furthermore, the use of the proposed six-element antenna at both ends of the link is assumed with each element having a gain $G_t = G_r$ of 6 dBi. The transmit array gain $G_{t,array}$ is then 20log6 dB due to the coherent addition of the signals at each receive branch. The antenna separation distance is assumed to be 10 meters in all cases. The path loss PL for this distance is 88 dB for LOS conditions and 92 dB for non-LOS conditions, assuming 4 dB shadow loss as reported in [4]. It is assumed that each LNA of a receive branch has a noise figure F of 8 dB [3]. The noise power at the entrance of the receiver P_n is calculated on the basis of the equivalent noise temperature T_{eq}, the equivalent noise bandwidth B_T and F as $P_n = kT_{eq}B_TF$, in which k represents Boltzmann's constant. The signal-to-noise ratio per receive branch, denoted as SNR in Table 2, is $P_t - P_n$ (in dB). The receive array

gain $G_{r,array}$ amounts to 20log6 – 10log6 due to the coherent addition of signals and incoherent addition of noise contributions of the individual receive branches. Summation of SNR and receive array gain yields the total resulting signal-to-noise ratio after combining the signal-to-noise contributions of all six branches at the receiving end. In Table 2, this value is denoted as SNR_{total}. The required signal to noise ratio is based on the curves in Fig. 4 for 5 dB back off at a BER of 10^{-3}. The resulting link margin can be used to obviate channel fading, polarization mismatch, antenna misalignment, channel interference, additional implementation losses, and flicker noise.

The resulting margin figures in Table 2 show that SC-CP should be the modulation scheme of choice in particular because it is much less vulnerable for obstruction of the LOS path.

Conclusions

We have presented the base-line design of low-cost 60-GHz radios. With the proposed design choices, a net data rate according to the IEEE 802.15.3c requirement of 2 Gb/s can be achieved with an antenna separation distance of 10 meters. This is possible by using narrow antenna beams produced by a circular array of six antenna elements at both ends of the link. A sufficiently high transmit power, as well as a sufficiently low effective noise figure is obtained by applying one PA as well as one LNA per antenna element. We propose a four-channel system with center frequencies chosen in such a way that it allows a simple synthesizer architecture. We also discussed the choice of the modulation scheme for 60-GHz radios, and we compared the two main candidates, OFDM and SC-CP. Link-budget calculations show that SC-CP should be the preferred modulation scheme in particular because it can provide sufficient link budget under non-LOS conditions without the requirement of a sophisticated coding scheme, which is a significant complexity advantage for high data rate systems.

References

[1] S. K. Yong and C-C. Chong, "An Overview of Multi-Gigabit Wireless Through Millimeter Wave Technology: Potentials and Technical Challenges," *EURASIP J. Wireless Commun. and Networking*, vol. 2007, 2007.

[2] The Commission of the European Communities, "On Allowing the Use of the Radio Spectrum for Equipment Using Ultra-wideband Technology in a Harmonized Manner in the Community," *Official J. EU*, Commission decision of Feb. 21, 2007, doc. nr C(2007) 522, Feb. 2007, pp. 55/33–55/36.

[3] U. R. Pfeiffer *et al.*, "A Chip-Scale Packaging Technology for 60-GHz Wireless Chipsets," *IEEE Trans. Microwave Theory and Techniques*, vol. 54, no. 8, Aug. 2006, pp. 3387–97.

[4] S. Sarkar and J. Laskar, "A Single-Chip 25pJ/bit Multi-Gigabit 60 GHz Receiver Module," *Proc. IEEE/MTT-S IMS '07*, June 3–8, 2007, Honolulu, HI, 2007, pp. 475–78.

[5] T. Yao *et al.*,"60-GHz PA and LNA in 90-nm RF-CMOS," *IEEE RFIC Symp.*, June 2006, 4 pages.

[6] P. F. M. Smulders, "Exploiting the 60-GHz Band for Local Wireless Multimedia Access: Prospects and Future Directions," *IEEE Commun. Mag.*, vol. 40, Jan. 2002, pp. 140–47.

[7] H. Yang, P. F. M. Smulders, and M. H. A. J. Herben, "Channel Characteristics and Transmission Performance for Various Channel Configurations at 60 GHz," *EURASIP J. Wireless Commun. and Networks*, vol. 2007, 2007.

[8] J. A. G. Akkermans and M. H. A. J. Herben, "Planar Beam-Forming Array for Broadband Communication in the 60-GHz Band," *Proc. EuCAP 2007*, Nov. 11–16, 2007, Edinburgh, UK, 2007, pp. 1–6.

[9] B. Razavi, "Design Considerations for Direct-Conversion Receivers," *IEEE Trans. Circuits and Sys.*, vol. 44, no. 6, June 1997, pp. 428–35.

[10] T. Pollet, M. V. Bladel, and M. Moeneclaey, "BER Sensitivity of OFDM Systems to Carrier Frequency Offset and Wiener Phase Noise," *IEEE Trans. Commun.*, vol. COM-43, 1995, pp. 191–93.

[11] C-L. Liu, "Impacts of I/Q Imbalance on QPSK-OFDM-QAM Detection," *IEEE Trans. Consumer Elect.*, vol. 44, no. 3, Aug. 1998, pp. 984–89.

[12] J. Tubbax *et al.*, "OFDM Versus Single Carrier: A Realistic Multi-Antenna Comparison," *EURASIP J. Applied Sig. Processing*, vol. 2004: 9, 2004, pp. 1275–87.

[13] D. Cabric *et al.*, "Novel Radio Architectures for UWB, 60-GHz, and Cognitive Wireless Systems," *EURASIP J. Wireless Commun. and Net.*, vol. 2006, 2006.

[14] X. Jiang, Z. Wang, and M. F. Chang, "A 2 Gs/s 6b ADC in 0.18um CMOS," *Proc. IEEE ISSCC '03*, San Francisco, CA, Feb. 2003, pp. 322–23.

[15] C. Rapp, "Effects of HPA-Nonlinearity on a 4-DPSK/OFDM-Signal for a Digital Sound Broadcasting System," *Proc. ECSC-2*, Oct. 1991, Liege, Belgium, pp. 179–84.

Biographies

PETER F. M. SMULDERS [SM] (p.f.m.smulders@tue.nl) has been a staff member in the Radiocommunication Group (ECR) within the Faculty of Electrical Engineering at Eindhoven University of Technology, The Netherlands, since 1988. In addition to his lecturing duties, he performed Ph.D. research in the field of broadband wireless LANs. His work addresses the feasibility of low-cost low-power small-sized wireless LAN technology operating in the 60 GHz frequency band. He was involved in various research projects addressing 60 GHz antennas and interworking (ACTS, MEDIAN) and 60 GHz propagation (MinEZ, Broadband Radio@Hand). Currently, he is also addressing baseband design in the context of 60 GHz radio (Freeband, WiComm). As project manager of the SiGi-Spot project, his future research activities will range from 60 GHz physical layer design to associated network aspects. His research interest IN 60 GHz physical and higher layers is reflected in numerous IEEE publications.

HAIBING YANG [M] (h.yang@tue.nl) received a B.S. degree in detection and instrumentation and an M.S. degree in electrical engineering from Xidian University, Xi'an, China, and the Professional Doctorate in electrical engineering from Eindhoven University of Technology in 1997, 2000, and 2002, respectively. Since 2003 he has been with the Radiocommunications Group at Eindhoven University of Technology working on millimeter-wave communications. His research interests are in the areas of radio channel modeling and signal processing for wideband wireless communications. From 2001 until 2002 he was a research assistant at Philips Research Laboratory, Eindhoven, focused on Doppler cancellation for mobile DVB-T reception. He is a member of the Dutch Electronics and Radio Society.

J. A. G. AKKERMANS (j.a.g.akkermans@tue.nl) received an M.Sc. degree in electrical engineering from Eindhoven University of Technology in 2004. Since 2004 he also has been working toward a Ph.D. degree at the same university. His research focuses on the design of antennas for broadband communication at millimeter-wave frequencies. His research interests include wireless power transfer, electromagnetic modeling, and antenna measurement.

With the proposed design choices, a net data rate according to the IEEE 802.15.3c requirement of 2 Gb/s can be achieved with an antenna separation distance of 10 meters. This is possible by using narrow antenna beams produced by a circular array of six antenna elements at both ends of the link.